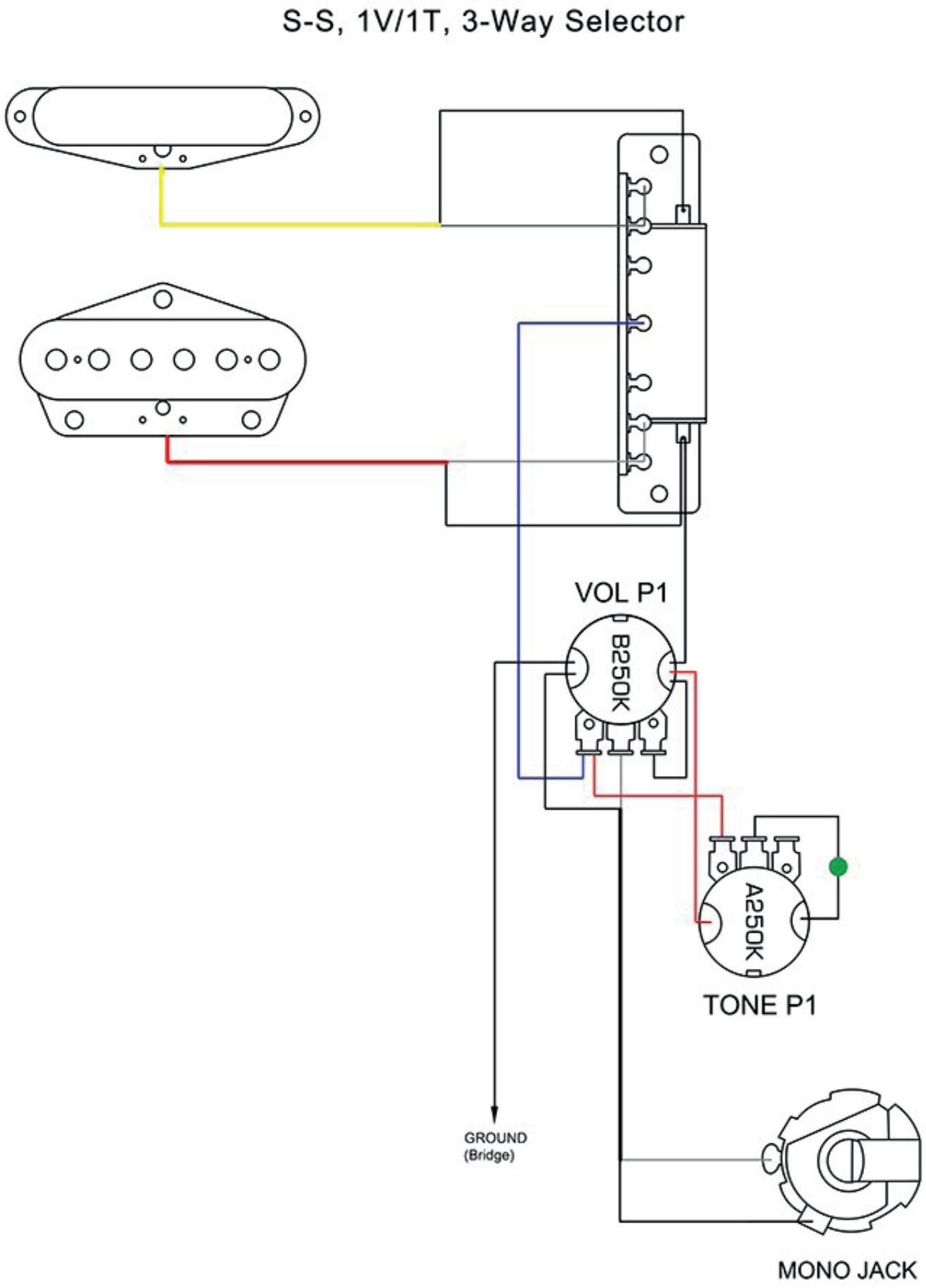KIT-TE-20 wiring diagram